burkert
FLUID CONTROL SYSTEMS



2/2-way Solenoid Valve with servo-diaphragm, G 3/8 - G 1

- High flow rate
- Cost effective
- Low power consumption
- Compact
- Pressure range 0.5 up to 10 bar

Type 6211 can be combined with...



Type 2506
Cable plug to DIN EN 175301-803*) Form C



Type 2507
Cable plug industrial standard Form B



Type 2510
ASI-cable plug

The Type 6211 is a servo-assisted normally closed 2/2-way solenoid valve with a servo-diaphragm for use especially with neutral fluids and gaseous media. The valve has a low power consumption, low weight and a compact body.

The valve is normally closed by spring force. Energized, the solenoid opens the pilot valve first. Then the medium pressure opens the main valve due to the pressure drop above the diaphragm. The valve opens.

The special design and geometry of the inner parts of the valve result in a soft closing function and cause almost no water hammer.

Circuit function A

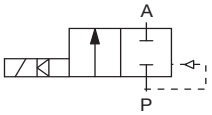

2/2-way valve, servo-assisted, normally closed

Technical data	
Body material	Brass (DIN 50930-6)
Body cover	PPE/PA
Sealing material	NBR, EPDM, FKM
Media NBR EPDM FKM	 neutral gases and fluids (e.g. compressed air, water, hydraulic oil, oil, fat without additives); oil and fat-free media (e.g. alkaline washing and bleaching lyes); per-solutions, oils with additives
Medium temperature NBR EPDM FKM	 0 ... +70 °C -10 ... +70 °C 0 ... +70 °C
Ambient temperature	max. +55 °C
Port connection	G 3/8 ... G 1 (NPT or RC on request)
Operating voltage	24 V DC 24 / 110 / 230 V / 50-60 Hz
Power consumption Inrush Hold	4 W 9 VA AC, 4 W DC (hot) 5W (cold) 6 VA AC, 4 W DC
Voltage tolerance	±10%
Duty cycle	100% continuous rating
Electrical connection	▪ Tag connector sidewards ▪ acc. to DIN EN 175301-803*) Form C for cable plug (on request) ▪ acc. to DIN 43650 Form B (industrial standard) for cable plug Type 2507 (see Ordering chart for accessories)
Installation	as required, preferably with actuator upright
Weight	see table Response times
Protection class	IP 65 with cable plug
Insulating class of coil Polyamide coil Epoxy coil	 Cable plug Form C - class B Cable plug Form B - class H Flying leads

DTS 1000011051 EN Version: F Status: RL (released | freigegeben | validé) printed: 20.01.2015

Response times

Orifice [kg]	Kv value water [m³/h]	Port connection [mm]	Pressure range [2] [bar] [1]	Response times Opening [ms]	Response times Closing [ms]	Weight Closing [kg]
10	1.9	G3/8, G1/2	0.5-10	20-25	100-120	0.31
13	3.6	G1/2, G3/4	0.5-10	100-200	200-250	0.44
20	8.3	G3/4, G1	0.5-10	400	500-700	1.03

[1] Pressure data [bar]: Overpressure with respect to atmospheric pressure
[2] For opening the full cross-section, a pressure difference of 0.5 bar is required.

- K_v value [m³/h]: Flow rate value for water, measured at +20 °C and 1 bar[1] pressure differential over a fully opened valve.
- Response times [ms]: measured at valve outlet at 6 bar[1] and +20 °C
  Opening: pressure build-up 0 ... 90%, Closing: pressure relief 100 ... 10%

Materials

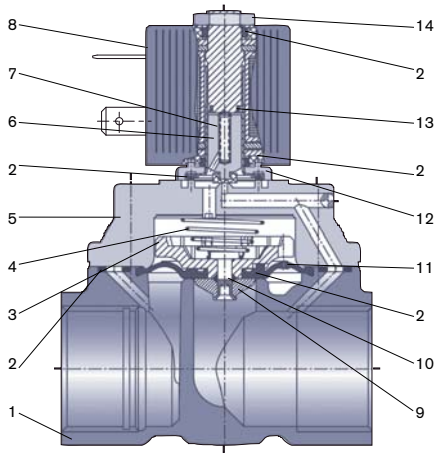

1	Body	Brass
2	O-ring	NBR, FKM, EPDM
3	Diaphragm support	PPS
4	Spring	St. st. 1.4310
5	Body cover	PPE/PA
6	Plunger	St. st. 1.4105
7	Spring	St. st. 1.4310
8	Coil	
	DIN EN 175301-803*) C	PA (on request)
	DIN 43650	
	(industrial standard) Form B	Epoxy
9	Diaphragm holder	Brass, PPS
10	Bolt	Brass
11	Diaphragm	NBR, FKM, EPDM
12	Flange	Steel
		(thick-film passivated acc. to Rohs)
13	Shading ring	Cu
14	Locknut	Steel
		(thick-film passivated acc. to Rohs)

DTS 1000011051 EN Version: F Status: RL (released | freigegeben | validé) printed: 20.01.2015

Ordering chart for valves (other versions on request)

Type 6211 Solenoid Valve with coil Form B (industrial standard) for cable plug, Type 2507
(cable plug not supplied)

Circuit function	Orifice DN [mm]	Port connection	Kv value water [m³/h]	Pressure range [bar][1)]	Item no. per voltage/frequency [V/Hz] 24/DC	24/50-60	110/50-60	230/50-60
A 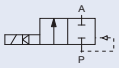	**Seal material NBR**							
	10	G 3/8	1.9	0.5-10	163 358	163 359	163 360	163 361
		G 1/2	1.9	0.5-10	161 944	163 362	163 363	163 364
	13	G 1/2	3.6	0.5-10	163 384	163 385	163 386	163 387
		G 3/4	3.6	0.5-10	163 388	163 389	163 390	163 391
	20	G 3/4	8.3	0.5-10	163 408	163 409	163 410	163 411
		G 1	8.3	0.5-10	163 412	163 413	163 414	161 469
	Seal material FKM							
	10	G 3/8	1.9	0.5-10	163 369	163 370	163 371	163 372
		G 1/2	1.9	0.5-10	161 946	163 373	163 374	163 375
	13	G 1/2	3.6	0.5-10	163 392	163 393	163 394	163 395
		G 3/4	3.6	0.5-10	163 396	163 397	163 398	163 399
	20	G 3/4	8.3	0.5-10	163 415	163 416	163 417	163 418
		G 1	8.3	0.5-10	163 419	163 420	163 421	163 422
	Seal material EPDM							
	10	G 3/8	1.9	0.5-10	163 336	163 337	163 338	163 339
		G 1/2	1.9	0.5-10	163 340	163 351	163 352	163 353
	13	G 1/2	3.6	0.5-10	163 376	163 377	163 378	163 379
		G 3/4	3.6	0.5-10	163 380	163 381	163 382	163 383
	20	G 3/4	8.3	0.5-10	163 400	163 401	163 402	163 403
		G 1	8.3	0.5-10	163 404	163 405	163 406	163 407

[1)] Pressure rate [bar]: Overpressure with respect to atmospheric pressure

Ordering chart for accessories

Cable plug Type 2507, Form B Industrial standard

	Description	Voltage	Item no.
	None (standard)	0 - 250 V AC/DC	423 845
	With LED and varistor	24 V AC/DC	423 849
	With LED and free-wheeling diode	24 V/DC	423 851
	With rectifier, LED and varistor	12 - 24 V AC/DC	423 853

Supplied with cable plug: flat seal and fixing screw.
Other versions of cable plug Form B (industrial standard) with circuitry see separate Datasheet Type 2507.

Further versions on request

Electrical Connection
Coil with cable plug acc. to DIN EN 175301 Form C
Coil with flying leads

Port Connection
Threaded port NPT, Rc

Approvals
UR/CSA

DTS 1000011051 EN Version: F Status: RL (released | freigegeben | validé) printed: 20.01.2015

Dimensions [mm]

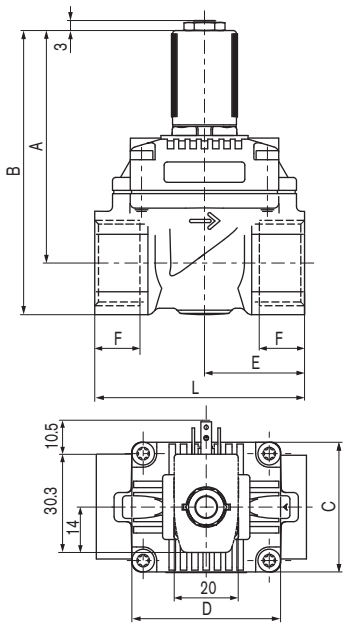

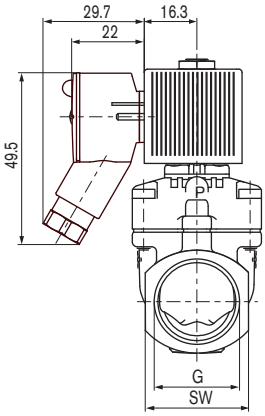

Coil acc. to DIN EN 175301-803*)
Form C for cable plug 2506

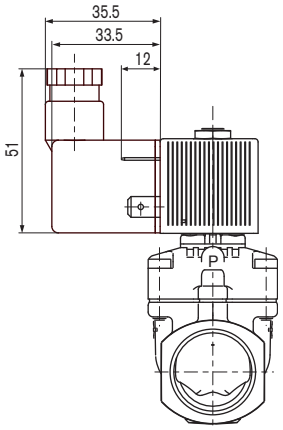

Coil acc. to DIN 43650 Form B
(industrial standard) for cable plug
Type 2507

[1] For port connection G thread F1 and G1 applies;
port connection NPT thread F2 and G2;
port connection Rc thread F3 and G3.

*) so far DIN 43650

DN [mm]	A	B	C	D	E	F1 [1]	G1 [1]	F2 [1]	G2 [1]	F3 [1]	G3 [1]	L	SW
10	67.5	81.5	32	32	25	14	G1/2	13.7	NPT1/2	13.2	Rc1/2	55	27
10	67.5	81.5	32	32	25	12	G3/8	10.3	NPT3/8	10.1	Rc3/8	55	27
13	72	88	40	46	31	16	G3/4	14	NPT3/4	14.5	Rc3/4	65	32
13	72	88	40	46	31	14	G1/2	13.7	NPT1/2	13.2	Rc1/2	65	32
20	81	101.5	60	60	50	18	G1	16.8	NPT1	16.8	Rc1	100	41
20	81	101.5	60	60	50	16	G3/4	14	NPT3/4	14.5	Rc3/4	100	41

To find your nearest Bürkert facility, click on the orange box → www.burkert.com

In case of special application conditions, please consult for advice.

We reserve the right to make technical changes without notice.
© Christian Bürkert GmbH & Co. KG

DTS 1000011051 EN Version: F Status: RL (released | freigegeben | validé) printed: 20.01.2015